8. Exploded Views and Parts List (ML-1520)

8.1 Main Assembly . . . . . page(8-2)

8.2 Frame Unit Assembly . . . . . page(8-4)

8.3 Driver Unit Assembly . . . . . page(8-7)

8.4 Fuser Unit Assembly . . . . . page(8-8)

8.5 Cassette Unit Assembly . . . . . page(8-10)

- Exploded drawings and service parts lists are given for items which may be expected to have a higher failure rate.
- Where a failure occurs you can identify the part in the exploded diagram and, using the parts cross reference number, refer to the appropriate parts list to identify the part number.

Note : Parts numbers given here are correct at the time of publication. When ordering parts please use the on-line ordering system to check if there have been any changes to part numbers.

Part Number & Description format.

Part numbers and descriptions are defined according to a company standard. The information below will help you to understand the part number format and assist when ordering spare parts.

- **There are two types of Part number format.**

●●●●–●●●●●●	ex) 2007-007961	R-CHIP
■■●●–●●●●■ (└ It shows part specific)	ex) JB96-01268A	ELA UNIT-COVER TOP

(● : number ■ : letter)

Type 1 : This format is used throughout Samsung on all product ranges. Typically it is used for small components and electronic parts.

Type 2 : This format is controlled by individual Samsung Divisions and is used on specific products, typically for mechanical parts. Type 2 format part numbers fall into 2 categories:

- **A/S privately used part :** It is only used for A/S .
- **Ass'y part :** Assemblies consisting of 2 or more parts. Also used for Service manuals, user guides and diagrams.

- Ass'y parts and A/S privately used Parts can be distinguished by the part Code and Description. They are always Type 2 format. The 2 leading characters indicate private or assembly parts.

DIVISION	PART CODE	DESCRIPTION
A/S Private	**81-****** (JB81-00039A)	AS-********* (AS-USE)
ASS'Y Part	**75-****** (JB75-00068A)	MEC-******** (MEC-CHUTE)
ASS'Y Part	**92-****** (JB92-01131A)	PBA ********* (PBA MAIN-CONTROLLER)
ASS'Y Part	**97-****** (JB97-01089A)	MEA ********* (MEA UNIT-PULLEY IDLE)

IT-Spares.eu

8.1 Main Assembly

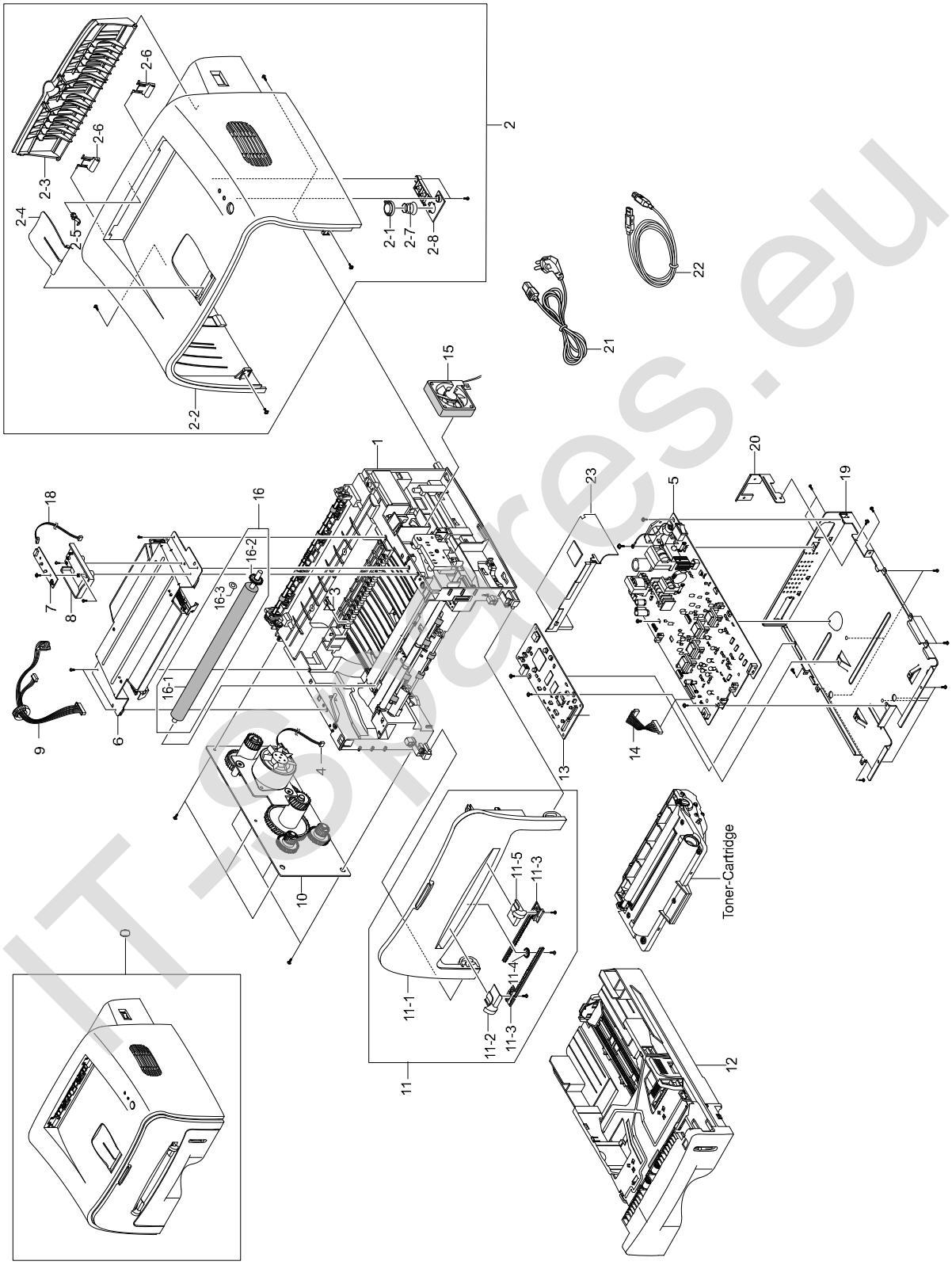

IT-Spares.eu

Main Assembly Parts List

SA : Service Available
O : Service available X : Service not available

No.	Description	SEC.Code	Q'ty	SA	Remark
0	SET	ML-1520			
1	ELA UNIT-FRAME LOWER	JC96-03137D	1	O	
2	MEA UNIT-COVER TOP	JC97-01992A	1	O	
2-1	LENS LED-M-LED	JC67-00026A	1	O	
2-2	COVER-TOP_KOREA	JC63-00304K	1	O	
2-3	COVER-M-REAR	JC63-00101C	1	O	
2-4	PMO-STACKER_RX	JC72-00973J	1	O	
2-5	PMO-BUSHING_F/DOWN	JC72-00387A	1	X	
2-6	PMO-SUB STACKER	JC72-01001A	2	O	
2-7	SPRING-CS	6107-001169	1	O	
2-8	KEY-M-ON LINE	JC64-00039A	1	O	
3	PLATE-P-CHANNEL	JC61-00606A	1	O	
4	CBF HARNESS-MOTOR	JC39-00241A	1	O	
5	SMPS- V2	JC44-00073A	1	O	⚠ 220V
	SMPS- V1	JC44-00072A	1	O	⚠ 110V
6	UNIT-HUMMINGBIRD-VE LSU	JC59-00018C	1	O	
7	PBA MAIN-PANEL	JC92-01439A	1	O	
8	COVER PCB-M-PCB	JC63-00104A	1	O	
9	CBF HARNESS-LSU	JC39-00242A	1	O	
10	ELA UNIT DRIVE	JC96-03138A	1	O	
11	MEA UNIT-COVER FRONT	JC97-01994A	1	O	
11-1	COVER-M-FRONT	JC63-00103K	1	O	
11-2	ADJUST-M-MANUAL_L	JC70-00302G	1	O	
11-3	ADJUST RACK-M-MANUAL	JC70-00304A	2	O	
11-4	GEAR-RACK_PINION	JC66-00387A	1	O	
11-5	ADJUST-M-MANUAL_R	JC70-00303G	1	O	
12	MEA UNIT-CASSETTE	JC97-01993A	1	O	
13	PBA MAIN-CONTROLLER	JC92-01622A	1	O	ML-1520
14	CBF HARNESS-ENGINE	JC39-00240A	1	O	
15	FAN-DC	3103-001085	1	O	
16	MEA ETC-TR	JC97-02053A	1	O	
16-1	ROLLER-TRANSFER ROLLER	JC66-00725A	1	O	ML-1520
16-2	GEAR-TRANSFER	JC66-00395B	1	O	
16-3	PPR-SPACER_TR	JC72-00851A	2	X	
18	CBF HARNESS-PANEL	JC39-00244A	1	O	
19	SHIELD-P-ENGINE	JC63-00107A	1	X	
20	BRACKET-P-INLET	JC61-00601A	1	O	
21	CBF POWER CORD	3903-0000067	1	O	⚠ 220V
	CBF POWER CORD	3903-0000085	1	O	⚠ 110V
22	CBF INTERFACE-USB	JC39-00001A	1	O	
23	COVER-M-SMPS	JC63-00520A	1	O	

IT-spares.eu

8.2 Frame Unit Assembly

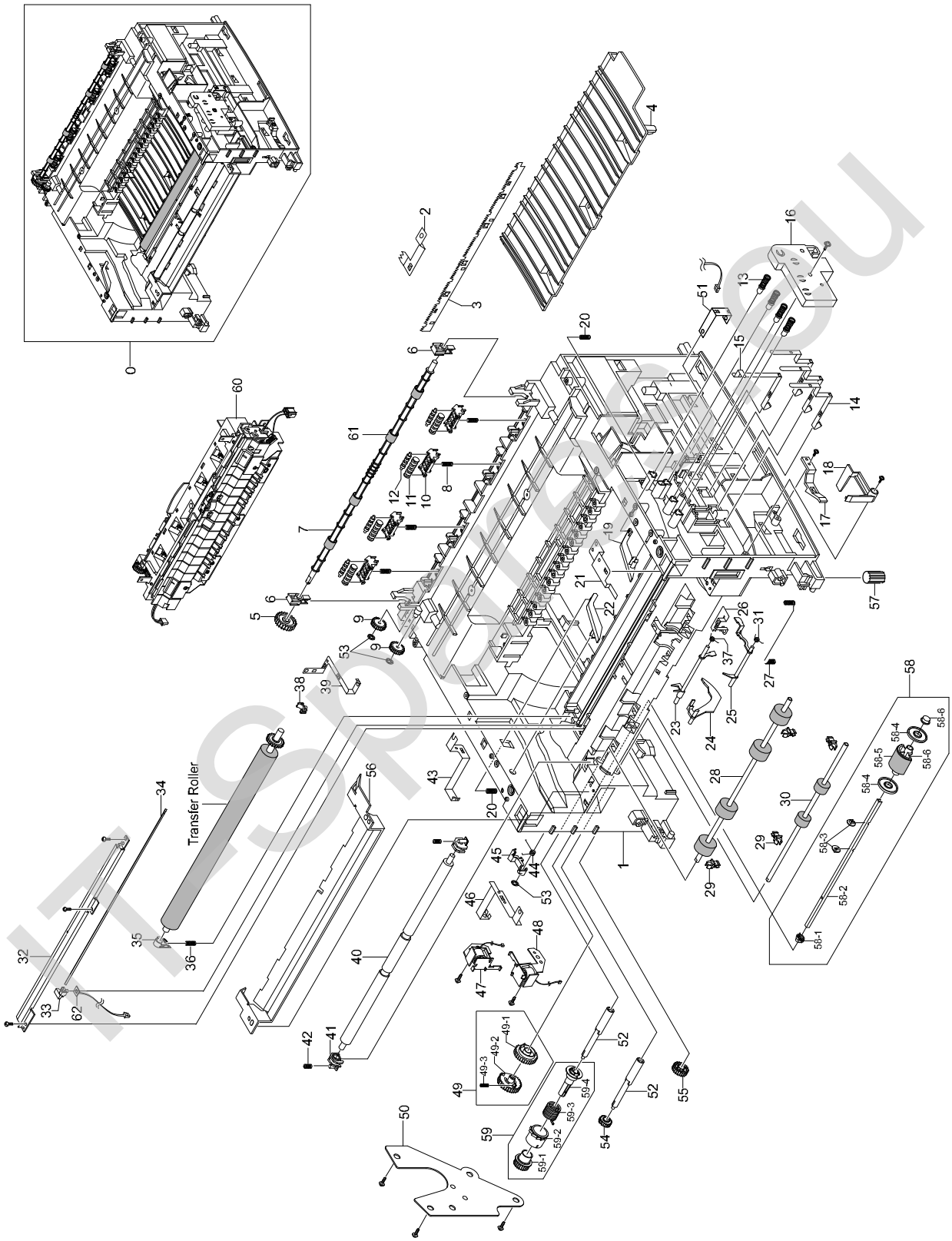

ITSparts.eu

Frame Unit Assembly Parts List

SA : Service Available
O : Service available X : Service not available

No.	Description	SEC.Code	Q'ty	SA	Remark
0	ELA UNIT-FRAME LOWER	JC96-03137D	1	O	⚠ 220V
	ELA UNIT-FRAME LOWER	JC96-03137C	1	O	⚠ 110V
1	FRAME-M-BASE	JC61-00579A	1	X	
2	GROUND-SAW	JC63-00465A	1	X	
3	PLATE-P-SAW	JC61-00604A	1	O	
4	GUIDE-M-TR RIB	JC61-00933A	1	O	
5	GEAR-EXIT F/DOWN	JC66-00038A	1	X	
6	HOLDER-BEARING,EXIT F/DOWN	JC61-00829A	2	X	
7	ROLLER-EXIT F/DOWN	JC66-00378A	1	O	
8	SPRING-CS	6107-001163	4	O	Spring Exit
9	PMO-GEAR_EXIT_DRV16	JC72-00143A	2	X	
10	HOLDER-M-EXIT F/DOWN	JC61-00582A	4	O	
11	PMO-M-ROLLER_EXIT,MAIN	JC72-41081B	4	X	
12	PMO-M-ROLLER_EXIT,FR	JC72-41082B	4	X	
13	MEC-TERMINAL	JC75-00049A	4	O	
14	IPR-P-TERMINAL CON	JC70-00312A	3	O	
15	IPR-P-TERMINAL CR	JC70-00313A	1	O	
16	HOUSING-TERMINAL	JC61-00592A	1	O	
17	PMO-LOCKER CST	JC72-00983A	2	O	
18	PMO-ACTUATOR CVR OPEN	JC72-00974A	1	O	
19	PMO-PLATE GUIDE DEVE_R	JC72-00985A	1	O	
20	SPRING ETC-GUIDE DEVE	JC61-70932A	2	X	
21	IPR-P-GROUND_GUIDE PAPER	JC70-00458A	1	O	
22	PMO-PLATE GUIDE DEVE_L	JC72-00984A	1	O	
23	PMO-ACTUATOR FEED	JC72-00976A	1	O	
24	PMO-ACTUATOR EMPTY	JC72-00975A	1	O	
25	PMO-ACTUATOR MANUAL	JC72-00977A	1	O	
26	IPR-P-GROUND_EARTH TR	JC70-00309A	1	X	
27	SPRING-ETC	6107-001162	1	O	
28	ROLLER-FEED ROLLER 1	JC66-00526A	1	X	
29	PMO-BUSHING FEED	JC72-00382B	4	X	
30	ROLLER-FEED	JC66-00598A	1	O	
31	SPRING-TS	6107-001164	1	X	Spring-act,Manual
32	IPR-P-EARTH TRANSFER	JC70-00307A	1	O	
33	HOLDER-PTL	JC61-00583A	1	O	
34	LENS-PTL	JC67-00027A	1	O	
35	BUSH-M-TR L	JC61-00588A	1	O	
36	SPRING ETC-TR L HAWK	JC61-00047A	1	X	
37	SPRING-TS	6107-001165	1	X	Spring-act,Feed
38	PMO-BUSHING_TR(L)	JC72-00102A	1	O	

ITespares.eu

Frame Unit Assembly Parts List(Cont.)

SA : Service Available
O : Service available X : Service not available

No.	Description	SEC.Code	Q'ty	SA	Remark
39	IPR-P-GROUND_FUSER	JC70-00310A	1	O	
40	SHAFT-FEED IDLE	JC66-00527A	1	O	
41	BUSH-M-FEED IDLE	JC61-00585A	2	X	
42	SPRING ETC-TR	JC61-70958A	2	X	Spring Feed Idle
43	IPR-P_GROUND_DRIVE2	JC70-00335A	1	O	
44	SPRING-TS	6107-001170	1	O	Spring-cam Pick-up
45	CAM-M-PICK_UP	JC66-00377A	1	O	
46	IPR-P-GROUND_DRIVE	JC70-00308A	1	O	
47	SOLENOID-HB (PICK-UP)	JC33-00009A	1	O	
48	SOLENOID-HB (MANUAL)	JC33-00010A	1	X	
49	AS-GEAR PICK_UP	JC81-01692A	1	O	
49-1	PMO-GEAR PICK_UP B	JC72-00980A	1	O	
49-2	PMO-GEAR PICK_UP A	JC72-00979A	1	O	
49-3	SPRING-CS	6107-001167	1	X	Spring-Pick-up gear
50	BRACKET-P-FEED	JC61-00602A	1	O	
51	IPR-P-GROUND_TR	JC70-00311A	1	O	
52	SHAFT-FEED	JC66-00398A	2	O	
53	RING-CS	6044-000001	3	X	
54	GEAR-FEED 2	JC66-00394A	1	O	
55	GEAR-IDLE 23	JC66-00396A	1	O	
56	GUIDE-P-PAPER	JC61-00718A	1	O	
57	FOOT-FRONT	JC61-00836A	2	X	
58	AS-PICK UP	JC81-01693A	1	O	
58-1	BUSH-M-PICK_UP L	JC61-00586A	1	X	
58-2	SHAFT-P-PICK_UP	JC66-00399A	1	X	
58-3	STOPPER-PICK_UP	JC61-00593A	2	X	
58-4	PMO-IDLE PICK_UP	JC72-00982A	2	O	
58-5	SPONGE-ROLLER PICK_UP	JC72-01231A	1	O	
58-6	BUSH-M-PICK_UP R	JC61-00587A	1	O	
58-7	HOUSING-M-PICK_UP	JC61-00591A	1	O	
59	MEA UNIT-CLUTCH	JC97-01788A	1	O	
59-1	GEAR-FEED 1	JC66-00393A	1	O	
59-2	PMO-COLLAR_SPRING	JC72-00978A	1	O	
59-3	SPRING-TS	6107-001171	1	X	
59-4	PMO-HUB CLUTCH	JC72-00981A	1	O	
60	ELA HOU-FUSER	JC96-03135B	1	O	⚠ 220V
	ELA HOU-FUSER	JC96-03135A	1	O	⚠ 110V
61	RMO-RUBBER EXIT	JC73-40915A	4	X	
62	PBA MAIN-PTL	JC92-01620B	1	X	

ITspares.eu

8.3 Driver Unit Assembly

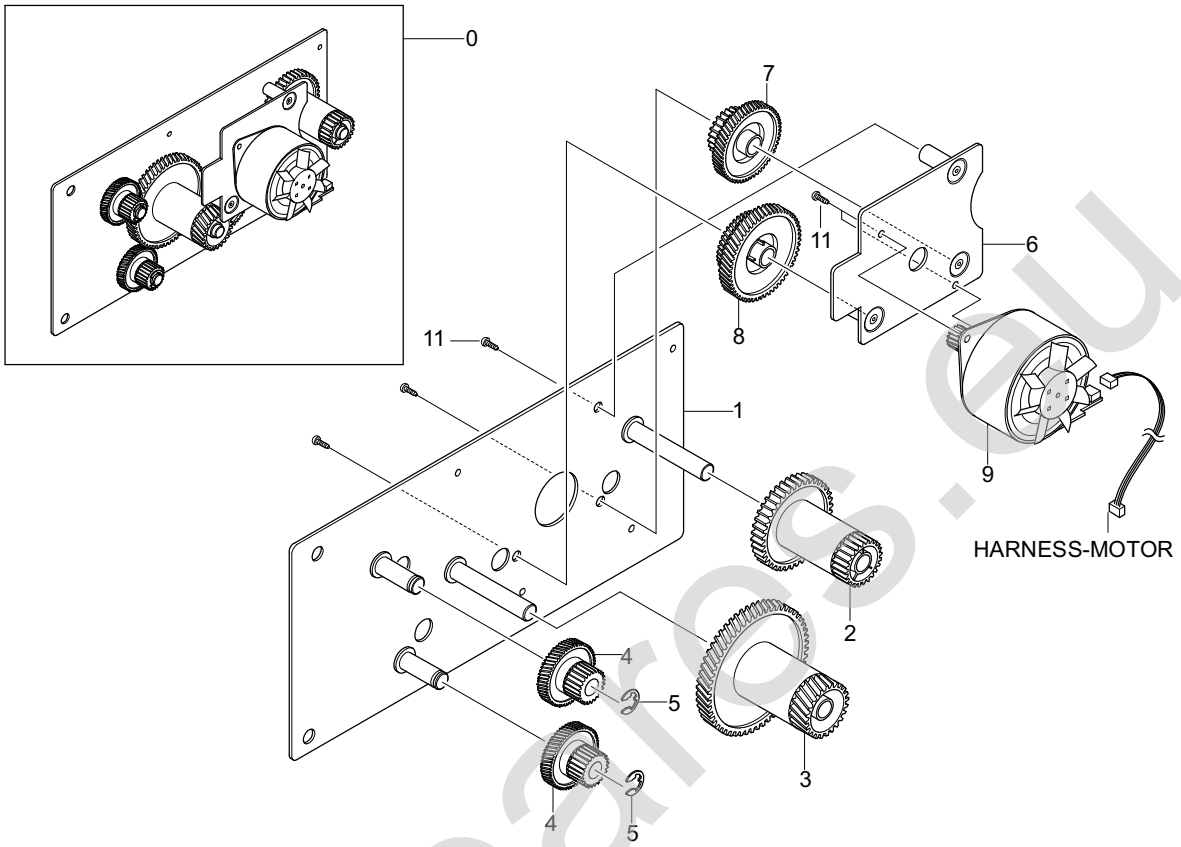

Driver Unit Assembly Parts List

SA : Service Available
O : Service available X : Service not available

No.	Description	SEC.Code	Q'ty	SA	Remark
0	ELA UNIT-DRIVE	JC96-03138A	1	O	
1	BRACKET-P-GEAR 1400	JC61-00598A	1	X	
2	GEAR-RDCN 53/26	JC66-00388A	1	X	
3	GEAR-RDCN 113/33	JC66-00391A	1	X	
4	GEAR-RDCN 57/18	JC66-00389A	2	X	
5	WASHER-PLAIN	6031-000023	2	X	
6	BRACKET-P-MOTOR 1400	JC61-00599A	1	X	
7	GEAR-RDCN 103/41	JC66-00390A	1	O	
8	GEAR-RDCN 90/31	JC66-00392A	1	O	
9	MOTOR STEP	JC31-00020A	1	O	
10	PMO-IMPELLER_DRV	JC72-00825A	1	X	
11	SCREW-MACHINE	6001-000131	5	X	

IT-Spares.eu

8.4 Fuser Unit Assembly

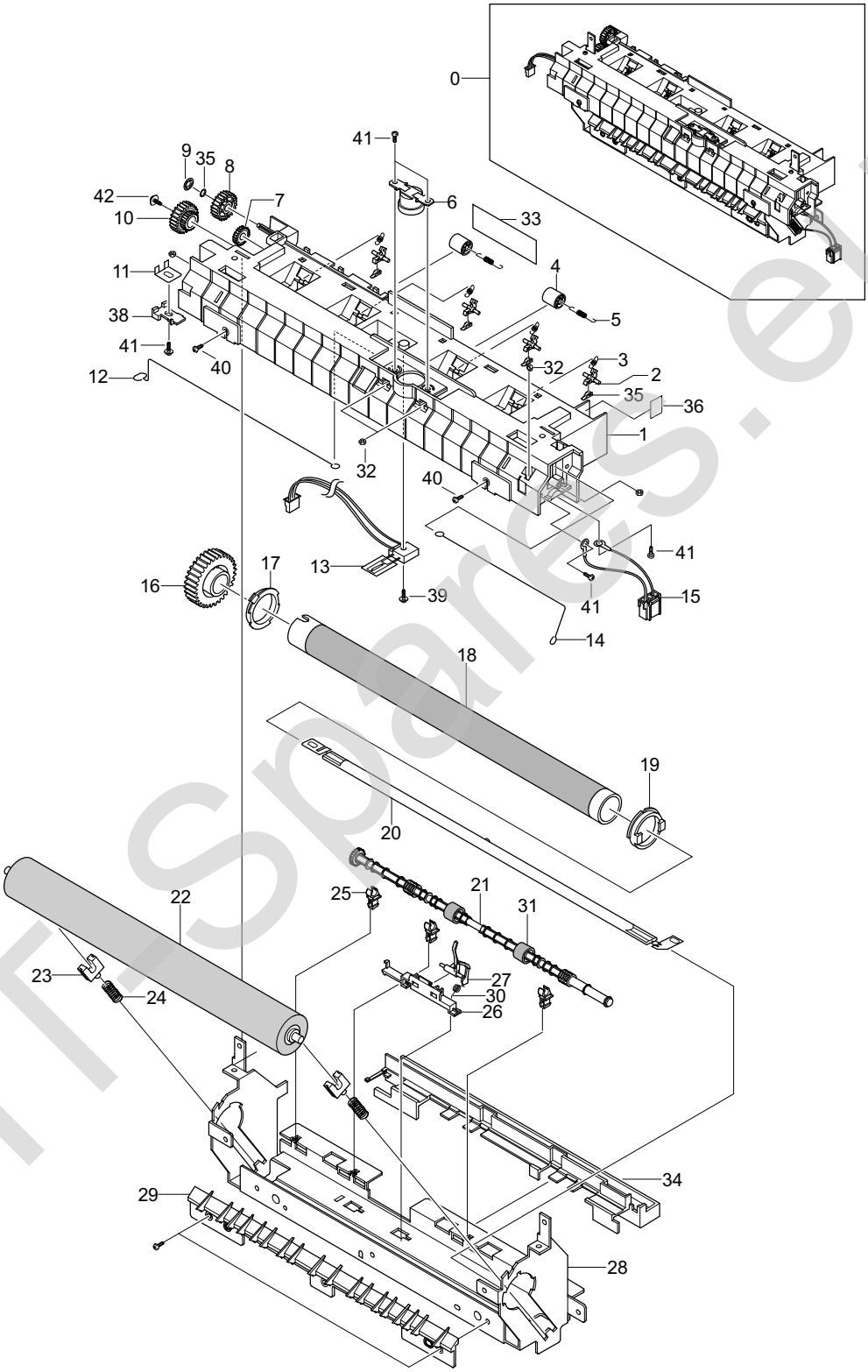

ITSpares.eu

Fuser Unit Assembly Parts List

SA : Service Available
O : Service available X : Service not available

No.	Description	SEC.Code	Q'ty	SA	Remark
0	ELA HOU-FUSER	JC96-03135B	1	O	⚠ 220V
	ELA HOU-FUSER	JC96-03135A	1	O	⚠ 110V
1	COVER-M-FUSER	JC63-00478A	1	X	
2	HOLDER-M-PLATE CLAW	JC61-00584A	4	X	
3	SPRING ETC-CLAW	JC61-00064A	4	X	
4	PMO-ROLLER EXIT	JC72-40361A	2	X	
5	SPRING ETC-FUSER EXIT	JC61-70976A	2	X	
6	THERMOSTAT-150	JC47-00005A	1	O	
7	PMO-GEAR_EXIT_DRV16	JC72-00143A	1	X	
8	GEAR-IDLE 23	JC66-00396A	1	X	
9	RING-CS	6044-000001	1	X	
10	GEAR-RDCN 25/15	JC66-00397A	1	O	
11	ELECTRODE_LAMP2	JC70-00466A	1	X	
12	ELECTRODE-WIRE_L	JC70-00450A	1	X	
13	THERMISTOR-NTC	1404-001298	1	O	
14	ELECTRODE-WIRE_R	JC70-00449A	1	X	
15	CBF HARNESS-FUSER 220V	JC39-00238A	1	O	⚠ BLACK
	CBF HARNESS-FUSER 110V	JC39-00238A	1	O	⚠ WHITE
16	GEAR-FUSER, Z37	JC66-00037C	1	O	
17	BUSH-M-HR L	JC61-00948A	1	X	
18	ROLLER-HEAT	JC71-00012B	1	O	
19	BUSH-M-HR R	JC61-00947A	1	O	
20	LAMP-HALOGEN	4713-001183	1	O	⚠ 220V
	LAMP-HALOGEN	4713-001182	1	O	⚠ 110V
21	ROLLER-M-EXIT F/UP	JC66-00380A	1	X	
22	ROLLER-PRESSURE	JC66-00731A	1	O	
23	BEARING-PRESSURE/R	JC66-10901A	2	X	
24	SPRING-BEARING PR	JC61-00453A	2	X	
25	PMO-BUSHING TX	JC72-00382A	3	X	
26	HOLDER-ACTUATOR	JC61-00581A	1	X	
27	PMO-ACTUATOR_EXIT	JC72-00987A	1	O	
28	FRAME-FUSER	JC61-00946A	1	X	
29	GUIDE-M-INPUT	JC61-00595A	1	X	
30	SPRING-TS	6107-001165	1	X	
31	RMO-RUBBER_EXIT	JC73-00017A	2	X	
32	NUT-HEXAGON	6021-000222	5	X	
33	LABEL(P)-CAUTION, HOT_FUSER	JC68-30928D	1	X	
34	PLATE-P-CLAW	JC61-00605A	4	X	
35	WASHER-PLAIN	6031-001051	1	X	
36	LABEL(R)-HV FUSER	JC68-00407A	1	X	⚠ 220V
	LABEL(R)-HV FUSER	JC68-00408A	1	X	⚠ 110V
38	COVER-LAMP_L	JC63-00521A	1	X	
39	SCREW-TAPTITE	6003-000196	1	X	
40	SCREW-TAPTITE	6003-000269	6	X	
41	SCREW-MACHINE	6006-001193	5	X	
42	SCREW-TAPTITE	6006-001078	1	X	

ITspares.eu

8.5 Cassette Unit Assembly

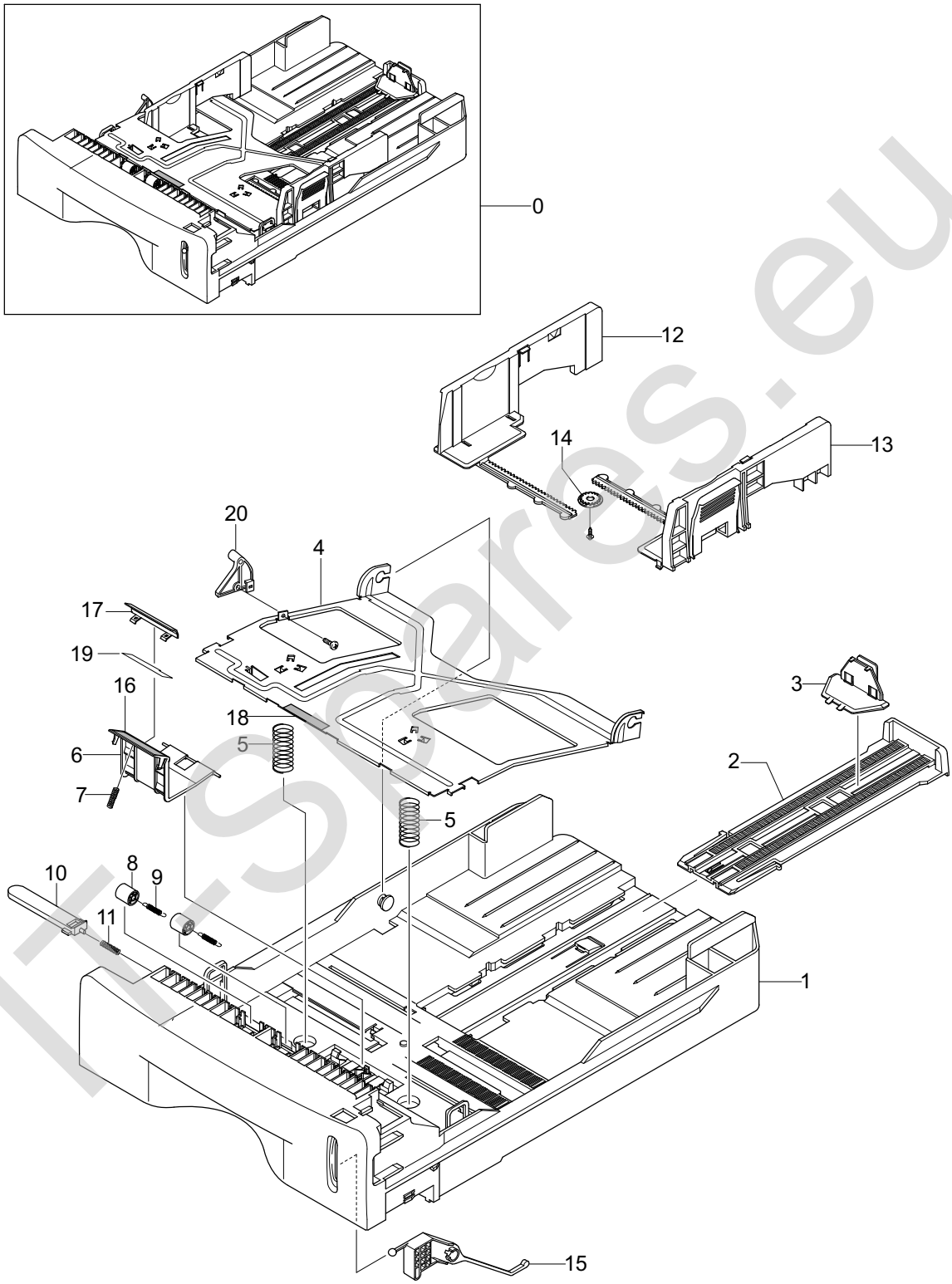

IT-Spares.eu

Cassette Unit Assembly Parts List

SA : Service Available
O : Service available **X** : Service not available

No.	Description	SEC.Code	Q'ty	SA	Remark
0	MEA UNIT-CASSETTE	JC97-01993A	1	O	
1	FRAME-M_CASSETTE	JC61-00578H	1	X	
2	GUIDE-M-EXTENSION L2	JC61-00918B	1	O	
3	PMO-EXTENSION SMALL	JC72-00971A	1	O	
4	PLATE-P-KNOCK_UP	JC61-00603A	1	X	
5	SPRING-CS	6107-001166	2	X	Spring-Knock_up
6	HOLDER-M-PAD	JC61-00580A	1	X	
7	SPRING ETC-EXIT ROLL FD	JC61-70911A	1	X	
8	ROLLER-M-IDLE FEED	JC66-00529A	2	X	
9	SPRING-ES	6107-001047	2	X	Spring-Feed
10	PMO-PLATE_LOCKER	JC72-00972A	1	X	
11	SPRING ETC-LOCKER,PLATE	JG61-70531A	1	X	
12	ADJUST-M-CASSETTE_L	JC70-00300A	1	O	
13	ADJUST-M-CASSETTE_R	JC70-00301A	1	O	
14	GEAR-PINION	JG66-40003A	1	X	
15	INDICATOR-M-LEVER INDICATOR	JC64-00040G	1	O	
16	RPR-FRICTION PAD	JC73-00140A	1	O	
17	IPR-PLATE PAD	JC70-00314A	1	X	
18	RPR-PAD CASSETTE	JC73-00141A	1	X	
19	SHEET-HOLDER PAD	JC63-00290A	1	X	
20	CAM-M-KNOCK_UP	JC66-00719A	1	X	

IT-Spares.eu